"UNION" SERVICE SPECIFICATION

NUMBER 3079

UNION SWITCH & SIGNAL . . . . . SWISSVALE, PA.
DIVISION OF WESTINGHOUSE AIR BRAKE COMPANY

STYLE "H-5" D.C. SEARCHLIGHT
SIGNAL OPERATING UNIT

****

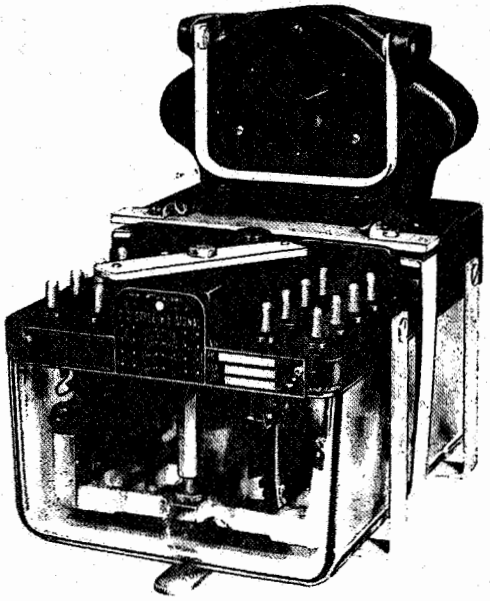

Front View with Glass Cover

Rear View without Glass Cover

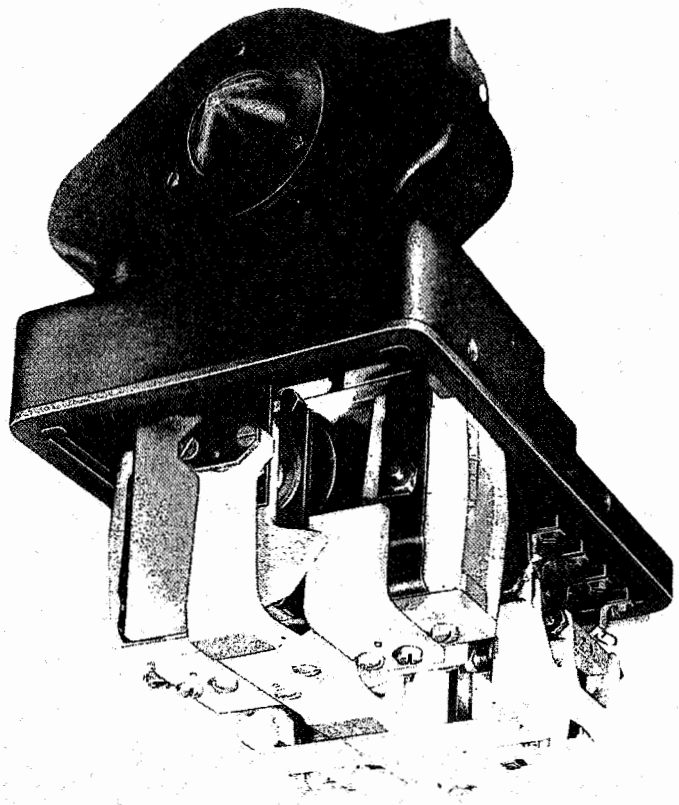

THE PURPOSE

of this specification is to give instructions and information to the shop forces on the overhauling and repair of operation units that have been removed from service.

REVISED: AUGUST, 1982

I N D E X

Page

I. Periodic Test and Shopping of Operating Units. 4

Inspection. 4

. 8

Removal of Top Plate and Contacts
Removal of Contact Armatures
Removal of Armature Assembly
Removal of Operating Coil
Field Assembly

. 10

Using original parts. 10
Operating Coil
Colored Roundels
Armature Assembly
Field Assembly

B. Replacement of parts in Armature Assembly. 12
New Armature Shaft
New Armature Pole Shoes, Spectacle and Roller Plate
Alignment of Shaft and Pole Shoes
New Operating Coil

C. Replacement of parts in Field Assembly. 16
New Backstrap and Pole Pieces
New Armature Bracket

D. Operating Mechanism. 17
Reassembly of Armature and Field Assemblies
Overlap and Airgaps
Contact Bracket
Pivots
Operating Arms
Contacts
Centering
Stroke
Top Plate and Glass Windows
Assembly of Top Plate to Mechanism
Assembly of Contacts
Adjustment of Contacts
Permanent Magnets

INDEX

Page

V. Calibration. 25

Release
Pick-up
Reverse Pick-up
Table of Operating Values

VI. Final Inspection 27

VII. Sealing. 28

Sytle "H-5" Searchlight Signal Operating Unit

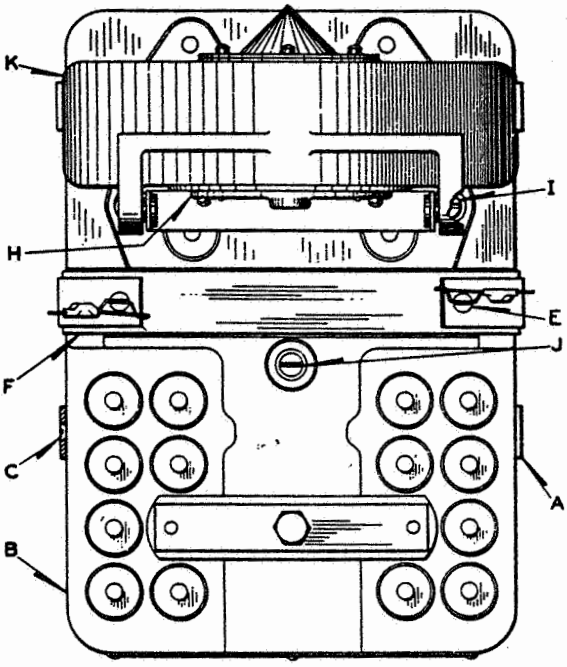

Fig. 1a...Top View of Operating Unit

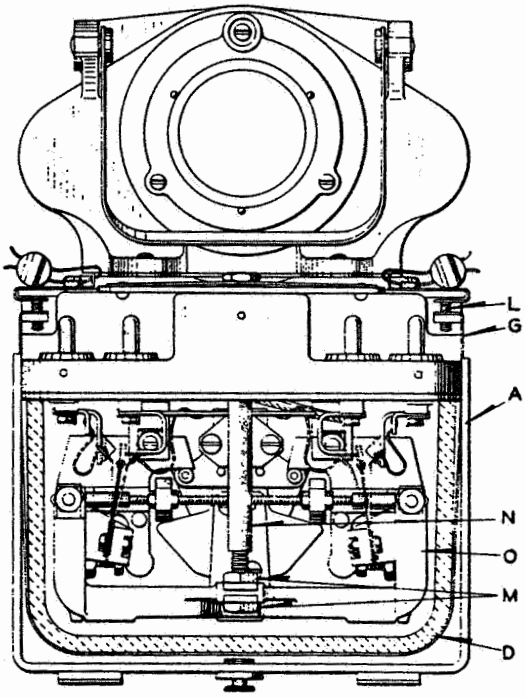

Fig. 1b...Front Sectional View of Operating Unit

I. GENERAL

The H-5 Searchlight Signal mechanism shall be inspected at least once every six months and tests of the operating characteristics of all parts shall be made at least once every two years. The principal purpose of the inspections and tests is to determine whether any friction is developing in the armature or other moving parts.

A jerky movement of the armature when current is varied gradually or an increase in pickup voltage and decrease in release voltage are indications of friction, roughness or foreign particles in the bearings or moving parts. A unit which has a calibration that varies more than 20% from the values given in the table of operating values, page 27, should be removed from service and shopped.

II. INSPECTION

All working parts of the operating unit are exposed for inspection and adjustment by removal of the supporting rack "A", Figs. 1a and 1b, (fastened to the top-plate "B" with four flat head screws "C"), and the glass cover "D". To remove the glass cover from the mechanism, unfasten the wire seal and screw "E" at each

end of the clamp bar "F" and remove the supporting bracket "G" by loosening fastening screws "L".

After the glass cover has been removed, the permanent magnets can be unclamped and removed from the frame to prevent attraction of filings or other particles of iron to the permanent magnets or the magnetized frame. To remove the permanent magnets "A", Fig.2, release the nut lock "B" and loosen the nut "C" on the bolt "D" holding the clips "E" in place. With the clips loosened

Fig. 2 - Side View showing Operating Mechanism (As furnished since Oct. 1945)

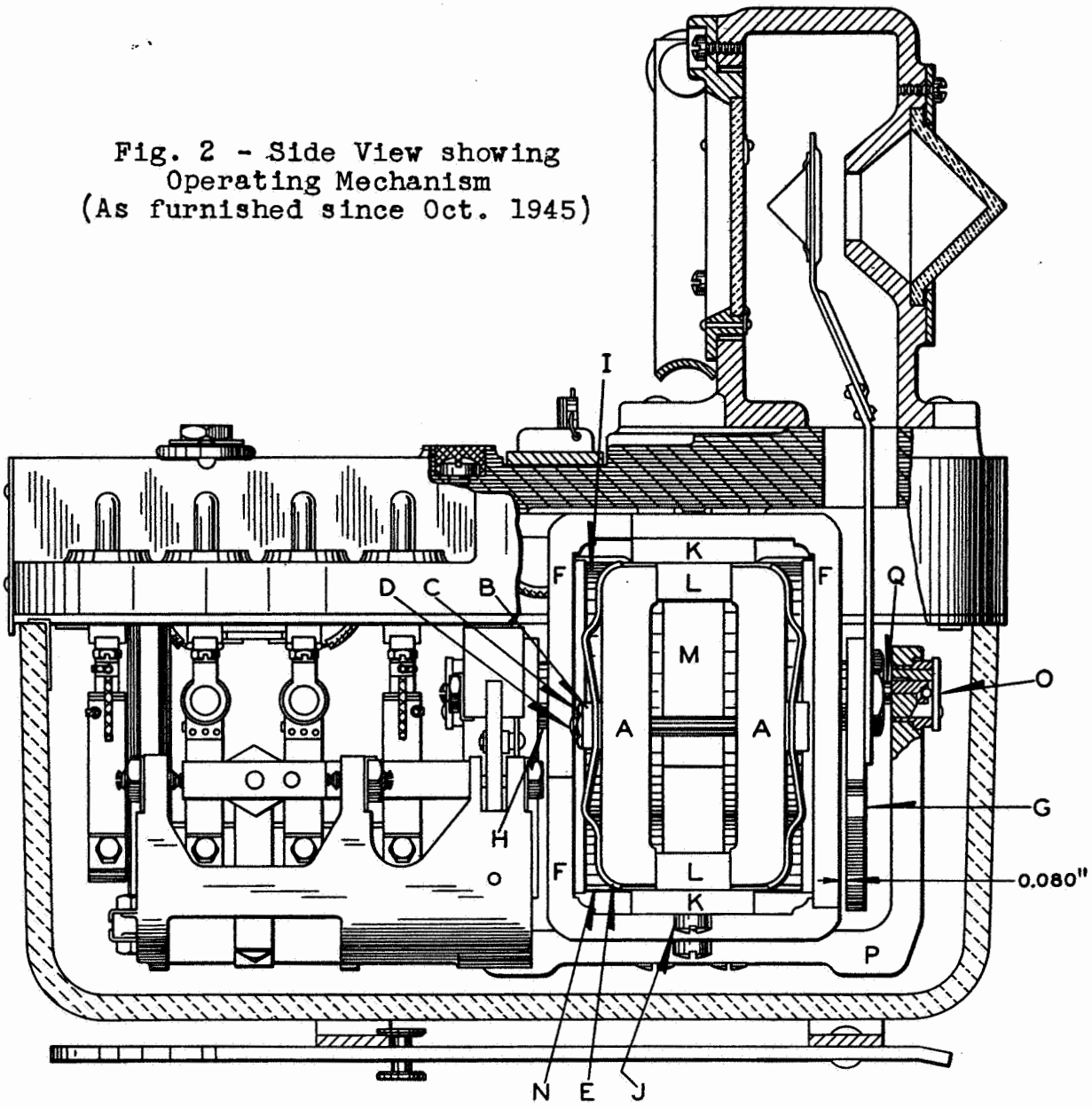

remove the clips and permanent magnets. Place the magnets together in pairs with unlike poles together and store in a clean pasteboard box to keep the magnets from picking up filings or other particles of iron. After being charged at the factory, the end of each magnet attracting the south seeking pole of a compass has been marked with a letter "N".

Ordinarily, unless it is necessary to replace the operating coil, or the frame structure has been damaged by a fall, it will not be necessary to remove the top plate or to dismantle the operating mechanism. Since the armature airgaps are fixed and the magnetic structure is of non-aging iron, the remaining elements which might affect the proper working of the armature are:

(1) the possibility of foreign particles in the clearances between the movable parts of the armature assembly and stationary parts of the mechanism, or

(2) knife-edge bearings.

The electrical test mentioned previously will readily indicate the presence of friction or foreign particles.

All clearances can be inspected and checked without dismantling the mechanism. Vertical airgaps between the fixed pole pieces "F", Fig.2, and the movable pole shoes "G" are nominally 0.080" with limits of 0.078" to 0.086", and are so located as to permit visual inspection or checking by means of a thickness gauge.

The knife-edge bearings may be opened for inspection and cleaning by removing the bearing caps "A", Fig.3, which are held in place by two flat head screws "B", the heads of which are flush with the surface of the caps. When removing a bearing cap for examination or cleaning, care should be taken not to lose the ball bearing "C", which is located in the end of the shaft "D". Clearance around the armature shaft "D", Fig.3, where it passes through the coil "J" can be checked by removing the knife-edge bearing on one end of the unit, checking the shaft "D" to see that it can be moved approximately 3/64" up, down or sideways from the center position. Inspect the shaft and knife-edge bearings for freedom from dirt or rust, especially the groove "F", the large diameter

of the shaft insert "G", the knife-edge "H" of the bearing "E" and the inside surface "I" of the bearing cap "A". If the shaft is dirty or rusty, remove the armature assembly from the field structure and polish the groove "F" or the large diameter "G" of the shaft "D" and then coat with Spec.168 oil.

Knife-edge bearings "E", Fig.3, bearing caps "A", and the steel balls "C" should be cleaned with benzine and immersed in a container of Spec.168 oil immediately after removal from the unit to prevent rusting. The front and back bearings should be marked and kept in separate containers with their respective spacer shims in order to simplify reassembly in the unit.

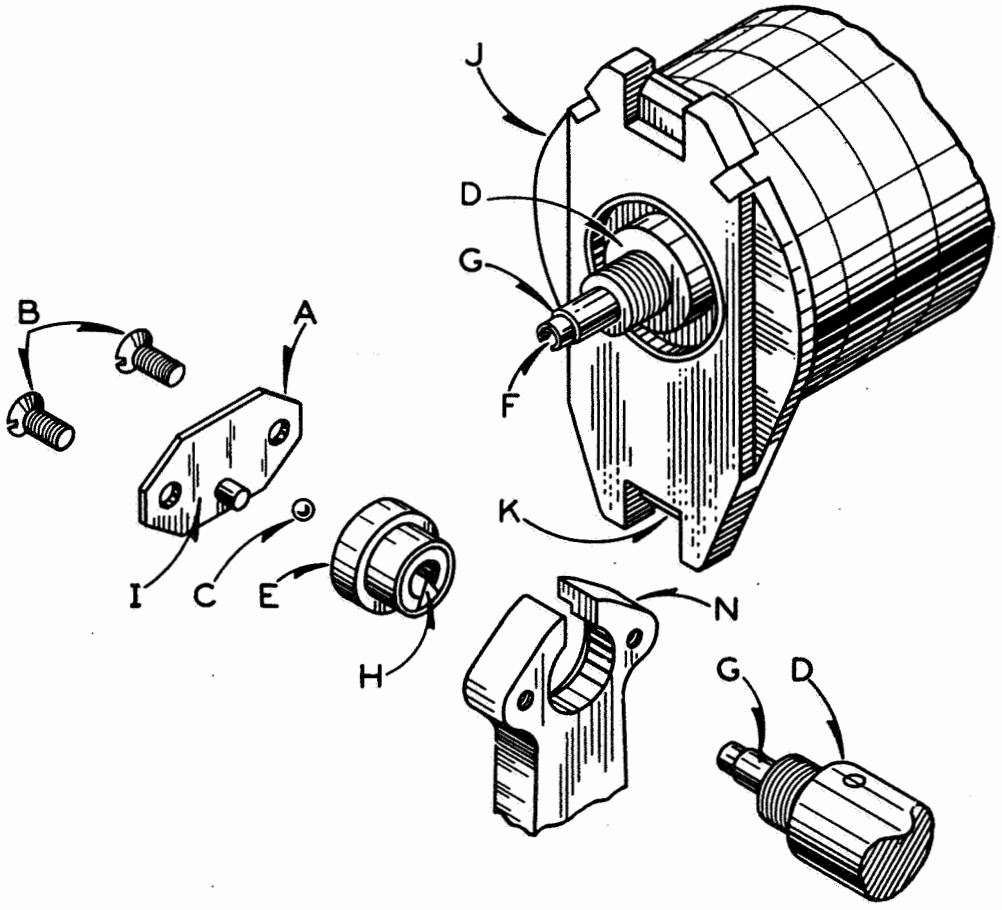

Fig. 3...Exploded View of Knife-Edge Bearing Assembly.

III. DISMANTLING

To remove the mechanism from the top plate, disconnect both coil leads, lightning arrester block, all flexible leads for back contacts and the two connector straps attached to the upper end of the flexible leads for the front contacts. Next remove the two screws "I" and one screw "J", Fig.1 (a), which hold the mechanism to the top plate "B".

Remove the strap attached to the center of the upper back-strap and the support in the front of the contact bracket.

Separate the two contact armatures by unbolting the front contact springs and connectors from the insulating block on one of the armatures. Remove the armatures from the contact bracket C, Fig.4. Similarly the operating arms "B" are removed by taking out their respective pivot screws.

Removal of the armature assembly shown in Figs.2 and 5 consisting of armature shaft "H", pole shoes "G", and coil "I" is accomplished by removing the two screws "J", Fig.2, which hold the upper back strap "K" and permanent magnet block "L" to the top of field spacer "M". Lift the upper portion of the field assembly consisting of the upper backstrap "K", upper pole pieces "F", and the coil clip "N", marking the backstrap so it will not be reversed in reassembly. With both knife-edge bearing assemblies removed, the armature assembly can be lifted upward out of the slotted ends of armature bracket "P".

To remove the operating coil "I", Fig.5, from the shaft "H" for replacement of the coil or cleaning of steel bearing inserts in the shaft, remove one clamping nut "R" and the corresponding pole shoe "G". The pole shoes are prevented from turning on the armature shaft by dowels, maintaining accurate relation to each other and to the grooves of the bearing insert. If, for any reason, both pole shoes are to be removed from the armature shaft, mark the pole shoes and the shaft so these parts can be reassembled in their original positions.

In the assembly of the mechanism at the factory, great care has been exercised in the accurate location and holding together

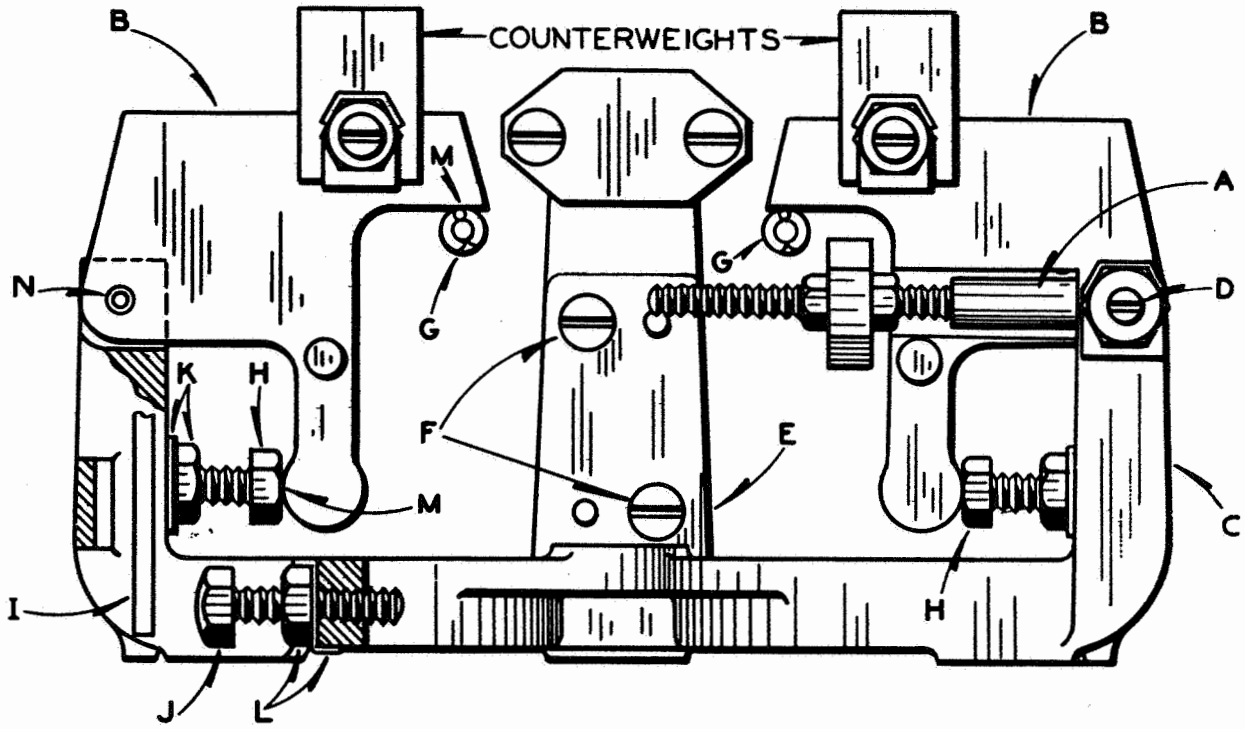

Fig. 4...View showing the Operating Studs, Counterweights, Stops and Contact Bracket

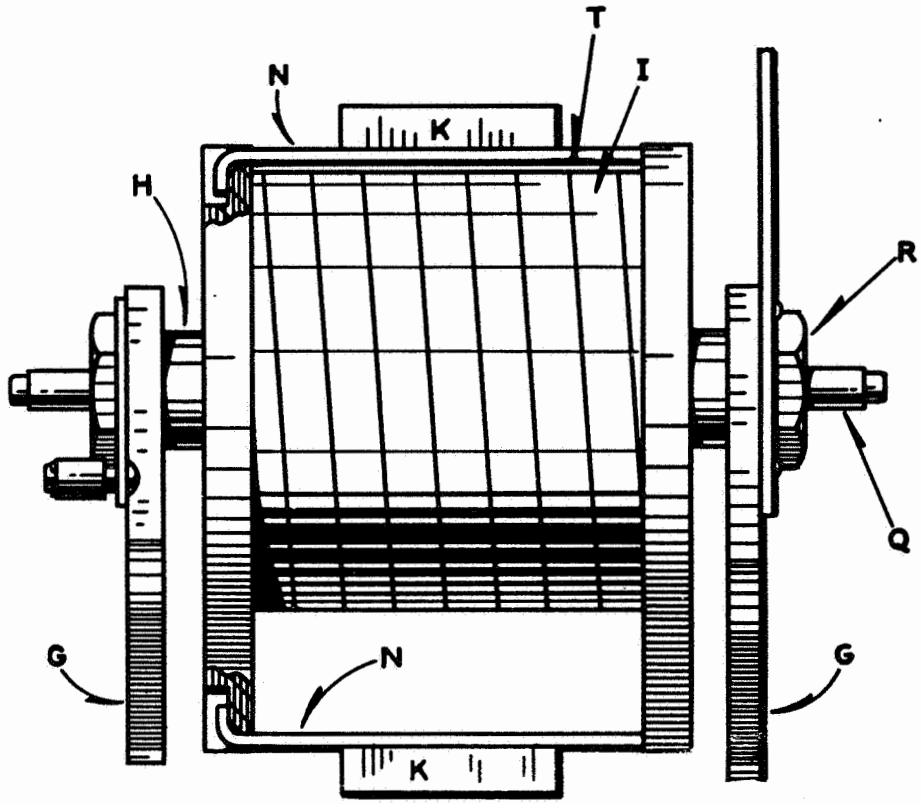

Fig. 5...View showing Armature Assembly and Method of Supporting the Operating Coil

of all parts involved in the fixed parallel air gap. Dowels are used to maintain this accurate relation between pole pieces "F" and backstraps "K", Fig.2, and between the armature bracket "P" and the lower backstrap "K". The surfaces in contact between any of these parts do not require opening or re-cleaning except in cases where excessive rusting has penetrated through the coating of aluminum paint or where replacement of parts necessitates readjustment of airgaps.

IV. REASSEMBLY

(A) Reassembly of Original Parts

When no replacement of armature shaft or pole shoes is required, no realignment of the parts making up the armature assembly is necessary as the dowels holding the shaft and pole shoes insure that proper relation will be maintained.

No readjustment of the location of the original coil is ordinarily required unless the mechanism has been damaged. However, in case of damage or when installing a new coil, the location of the coil should be checked to insure that it is properly centered. With the armature shaft removed, check the location of the coil as outlined in the next paragraph.

Insert in the operating coil a sleeve 3" long having an outside diameter of 0.788 inch and an inside diameter which will just slip over a 9/16 inch diameter rod. With the sleeve in the coil, set the coil in its correct position in the lower coil clip and fasten the upper backstrap assembly in place with its coil clip engaged in the upper slots of the coil head, making certain that the channel insulation ("T" Fig.5) is in the upper coil slots. Insert a 9/16 inch diameter rod long enough to reach through the bearing holes in the ends of the armature bracket. Adjustment is made by bending the coil clips as required until the rod turns freely, which insures uniform clearance between the coil and armature shaft.

Before placing the operating coil back on the armature shaft, the contact surfaces on the ends of the shaft and the pole shoes

must be clean and free from rust and the aluminum paint which was used at the factory to seal the exposed edges of the cleaned surfaces. After carefully cleaning these surfaces, coat the exposed iron surfaces with a thin film of oil Spec. 168, wiping off excess oil with a lintless cloth. Install the coil on the shaft and replace the pole shoe assembly and tighten the clamping nuts, taking care that the lead end of the coil faces the front pole shoe, Fig. 6. Wipe any excess oil from the exposed surface at the joint and apply a thin coat of aluminum paint over the exposed edges of the cleaned parts to seal the rust preventive film of oil between the bare iron surfaces and to exclude moisture from this joint. If necessary to reopen these joints, they must be recleaned, oiled and resealed with aluminum paint. The armature assembly complete with operating coil is then ready for assembly in the field structure.

Colored roundels must be free from large or unsightly scratches and other defects that may interfere with the passage of light through them. Rejection is a matter of judgment, but in general small scratches are not objectionable except in the center of the roundel where the light is concentrated. All roundels are in one piece, except the green, purple, and synthetic purple (special combination of red and purple). The green and purple roundels are separated into two pieces before the rim is applied, while the synthetic purple is made up of segments with ground edges, held together by the rim so clear light is not visible between parts. All roundels must be checked to insure that they are properly seated in the depression in the spectacle and that all clips securely clamp the roundel in place.

When no replacement of armature bracket, backstraps or field pole pieces is required, all parts are reassembled after the customary cleaning. All bare iron to iron joints opened during the process of dismantling should be carefully cleaned of rust etc. and given a new coating of oil Spec.168 before reassembly. Usually, unless damage or excessive rusting is present, it is not necessary to open the factory sealed joints between the backstraps and the

field pole pieces which are held together with screws and dowels.

(B) Armature Assembly

When an armature shaft must be replaced because of damage or has worn or badly rusted bearing inserts, it is recommended that an armature shaft complete with bearing inserts be purchased from the manufacturer. This will insure that the bearing inserts are properly aligned to provide minimum friction on the knife-edge bearing. Align the new shaft and pole shoes as outlined later.

If the front or back pole shoe "G", Figs. 6 and 7 respectively, or the parts attached to either of these pole shoes require replacement, care must be taken in reassembly of the new parts. The roller plate "c", Fig. 6, must be flat and have the roller studs "d" firmly riveted perpendicular to the plate. The roller plate must then be firmly riveted to the shoe "G" so the centerline "X-X" for the roller studs is located at 90 degrees from the centerline "Y-Y" of the pole shoe. The rollers "e" must be clean and free from burrs and turn freely on the roller shaft "d". The back pole shoe assembly, Fig. 7, must be riveted securely together so the axis "Y-Y" of the pole shoe "G", the arm "f" and the spectacle "h" lie in the same straight line, being careful not to bend or distort the arm or spectacle, otherwise the spectacle will not lie in a plane parallel to the plane of the pole shoe "G".

When replacement of the armature shaft or the pole shoes is required, it becomes necessary to align the pole shoes so their centerlines "Y-Y", Figs. 6 and 7, are parallel to each other and in proper relation to the bearing inserts "G", Fig. 3, in the armature shaft "D".

To align these three parts in proper relation to each other, a fixture such as shown in Fig. 8 should be used. It can be purchased as Pc. 236870-Dwg. C-16835-Sh. 2. This fixture has

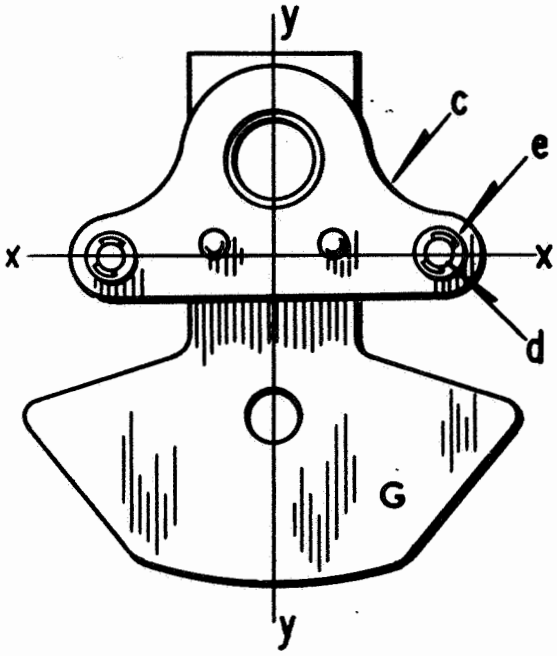

Fig. 6...Front Pole Shoe

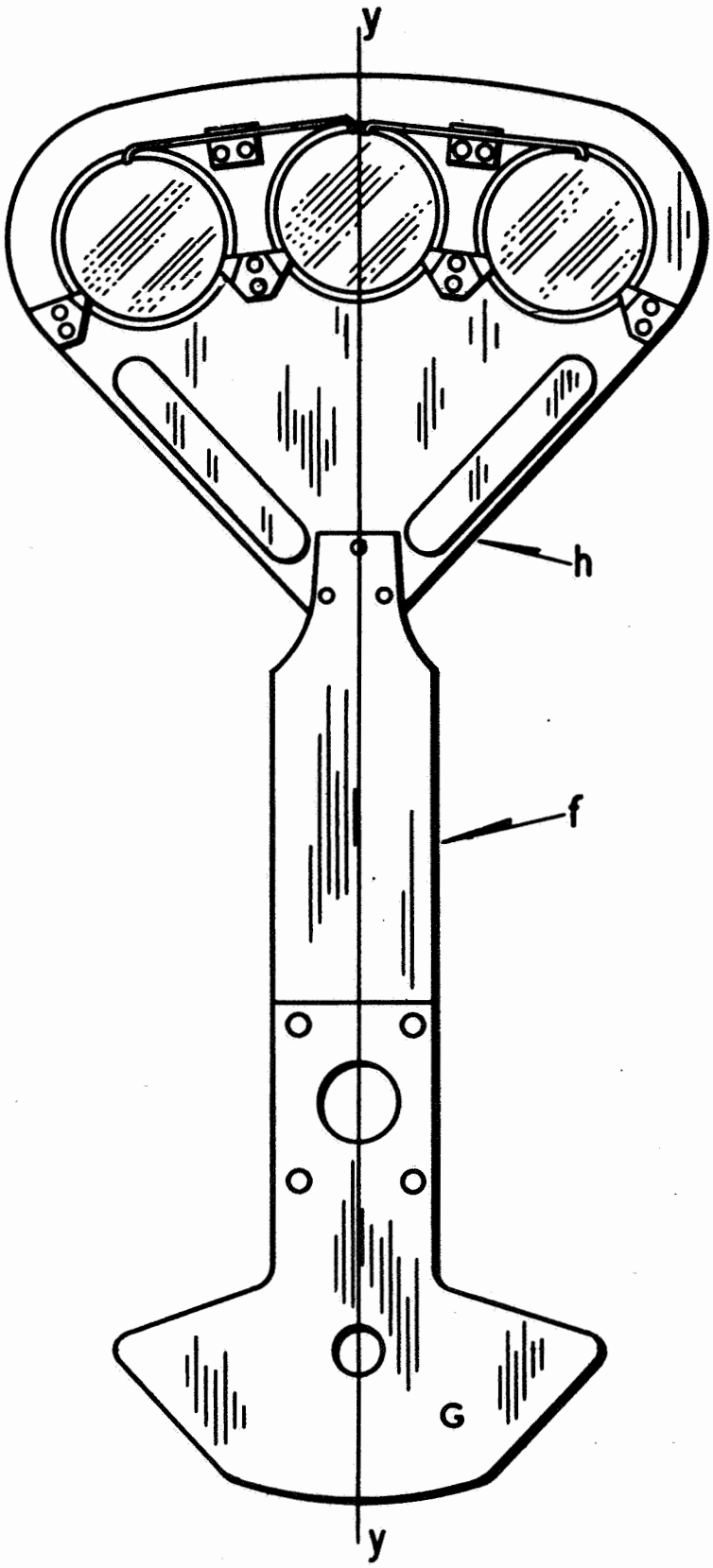

Fig. 7...Back Pole Shoe

two end plates "a" separated sufficiently to clear the locking nuts "b" on each end of the shaft "c" of the complete assembly with pole shoes "d" in place. On each of these end plates "a" is a 90 degree knife-edge "e" symmetrically located on the vertical centerline and carefully aligned with each other so the knife-edges are in line.

In the center of the fixture and over the center of armature "c" is a clamp "f" together with clamping screw "g" to hold the armature in place. Block "k" is exactly the same length as the spacing between pole shoes "d" and has a slot which is a close fit for rod "j" of diameter to just pass through a 1/4" hole. The centerline of this slot is accurately aligned in a vertical plane which passes through the center knife-edges "e".

In aligning the pole shoes, assemble the pole shoes to the armature shaft without attaching clamping nuts "b" and insert rod "j" through the 1/4" holes in the pole shoes. Place the assembly in the fixture, sliding rod "j" down into the slot in block "k", and placing the "V's" of the shaft inserts over the knife-edges "e" of the fixture. Set clamp "f" so that clamping screw "g" is over the center of shaft "c" and tighten screw "g" until the "V's" of shaft inserts are securely and squarely clamping down on the knife-edges "e".

Adjust the two screws "l" in the end plates of fixture until the two pole shoes are securely held against the ends of shaft "c" and block "k". The centerlines of the two pole shoes are now accurately aligned together and with the centers of the "V's" in the shaft inserts. With all parts so clamped together drill two .0595" diameter holes "i" (#53 drill size) 3/16" into each end of the shaft "c" on the horizontal centerline using the corresponding holes in the pole shoes "d" as templates.

Remove the assembly from the fixture and insert #52 x 5/16" drill rod dowels in the ends of shaft "c". These dowels

may be purchased as Pc. 25948-Dwg. 8097-Sh. 167. The dowels must be inserted to the full depth of the holes "i" in shaft "c" and it is suggested that a hollow end punch counterbored to the proper depth be used for driving them. Replace the pole shoes over the dowels on the ends of the armature and fasten in place with the two nuts "b". Recheck the alignment of the pole shoes in the fixture.

When a new operating coil is installed, the coil, spool, and leads must be clean and free from all compound to insure against foreign particles getting into the working mechanism. Particular care must be taken that the heads and the hole in the coil are clean and smooth.

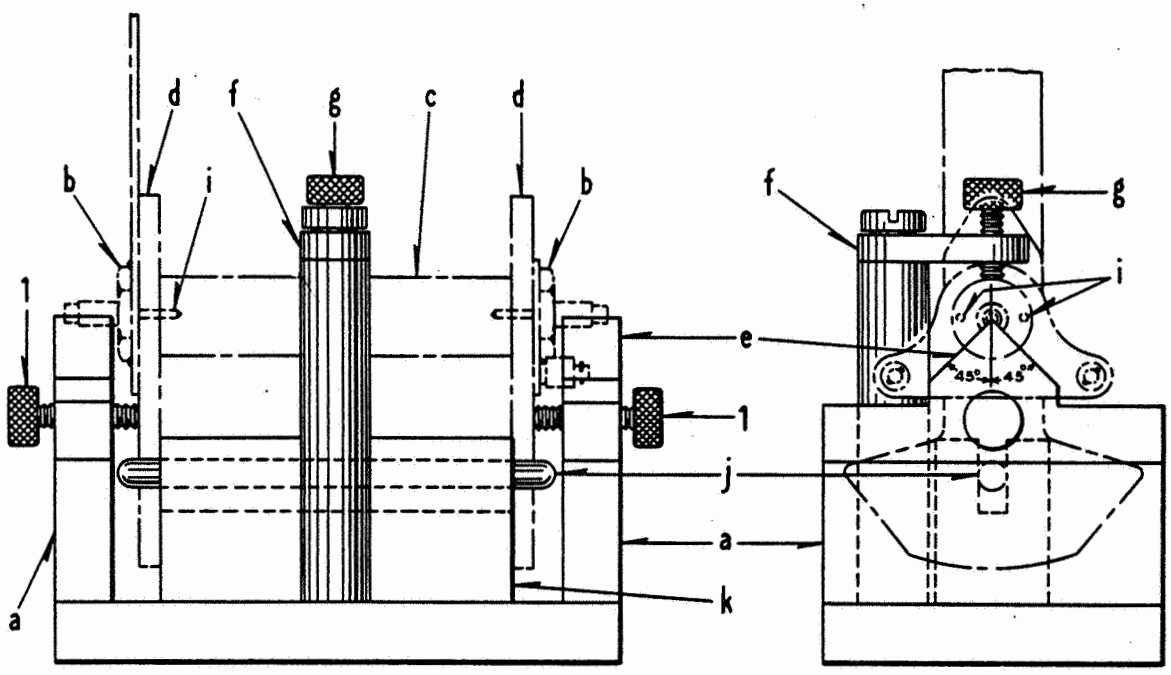

Fig. 8

ARMATURE ALIGNING FIXTURE

The foregoing procedure for checking the alignment of the original coil is followed for the new coil with the exception that the clip "N", Fig. 5, is bent to locate the coil sideways if required. The coil clips riveted to the backstraps are bent up or down to align the coil vertically. Make certain that the channel insulation is in the upper coil slots when making this adjustment.

(C) Field Assembly

When it is necessary to replace a backstrap, remove the coil clip from the old backstrap and rivet it to the new one, making certain that the clip is squared up with the centerline of the backstrap. Remove the field pole pieces "F", (Fig. 2), from the old backstrap and fasten them to the new backstrap with the screws. Final setting and doweling of the field pole pieces are made after the airgaps are adjusted as described later.

On operating units manufactured prior to April, 1945 all plating was removed from the magnetic joints between backstrap "K", Fig. 2, magnet blocks "L" and field pole pieces "F". Also the plating was removed from the sides of blocks "L" where contact is made with permanent magnets "A". The bare surfaces were treated with Spec. 168 oil, the same as outlined in Section IV-A. After the magnet blocks, top and bottom, had been aligned, fixed pole pieces attached, and the airgaps set and doweled, all the remaining exposed metal surfaces, except where permanent magnets make contact, were cleaned of excess oil with carbon-tetro-chloride and painted with a thin coat of aluminum paint. When it has become necessary, as discussed at various places in this specification, to dismantle the field structure of such units, all of the aluminum paint must be removed and the exposed metal surfaces thoroughly cleaned and treated with Spec. 168 oil. When structure has been reassembled the remaining exposed metal surfaces must be cleaned and painted as described

above. In April of 1945 the practice of removing the plating from the contacting surfaces of the magnetic structure was discontinued except for the armature assembly as described in Section IV-A. Therefore, it will be unnecessary, when reassembling such units, to give the magnetic joints the oil treatment and painting mentioned above.

When an armature bracket is replaced by a new one, fasten the new bracket to the lower back strap, and align the axis of the bearing holes in the ends of the bracket squarely with the centerline of the backstrap. Tighten and dowel the bracket to the backstrap.

(D) Operating Mechanism

Place the armature assembly (complete with operating coil) in the lower backstrap assembly with the coil slots properly engaged in the clip on the backstrap and with the front end of the armature assembly with front pole shoe, Fig. 6, facing the end of the armature bracket to which the contact armature bracket is attached. Install the knife-edge bearings with their original shims in the same ends of the armature bracket from which they were removed. Check the end play of the armature to be between 0.005" and 0.007". Readjustment of the end play may be required when the bearings or the armature shaft have been renewed. Remove any rust or dirt from the sides of the permanent magnet contact blocks "L", Fig. 2, that are in contact with the permanent magnets "A" and backstraps "K" and apply a thin coat of Spec. 168 oil. Clamp the lower permanent magnet contact blocks "L" between the lower backstrap "K" and spacer "M" with bolts "J", aligning them by holding a straight edge against the side of the blocks on the right and left sides of the unit. Place the channel insulation in the upper slots of the operating coil and set the upper permanent magnet blocks "L" and upper backstrap assembly in place (by means of the marking made at time of dismantling, make certain the backstrap is not reversed). Insert

upper bolts "J" and tighten only sufficiently to hold the upper backstrap in place. Apply a pair of flat bars (each $3\frac{1}{4}$" long by $1\frac{1}{4}$" wide by $\frac{1}{4}$" thick, having one face ground in a true plane and a $\frac{1}{4}$" hole through center of flat face) to the permanent magnet blocks and clamp together with a bolt. This will align the side surfaces of the upper block parallel with the corresponding surfaces of the lower block so that the ground faces of the permanent magnet make proper contact on the blocks. Clamp the upper block in place with screws "J" through the upper backstrap using a temporary screw in each end of the upper backstrap which is shorter than the screw "I", Fig. 1, which comes in the mechanism.

Keep the screws "J" tight in the upper backstrap, replacing the temporary end screws with the original longer screws only when the mechanism has been equipped with contacts, etc. and is ready for attachment to the top plate.

Install the knife-edge bearings and adjust the end play between the limits of 0.005" and 0.007". With the armature rotated to either side of the center position (as indicated by the dotted outline, Fig. 9, with the LH or RH roundel in the center position), check the overlap of the trailing tip of the movable pole shoe over the fixed field pole piece as indicated in Fig. 9. It must not be less than 0" nor more than 1/32". With the spacing between the pole pieces "A", Fig. 9, thus established, the airgaps between the fixed pole pieces and the movable pole shoes are checked for the nominal airgap of 0.080" (min. 0.078". and max. 0.086").

If the parallel airgap or the overlap is no longer within the limits given in the preceding paragraph due to damage or replacement of parts, correction must be made in the following manner. The pole pieces "F", Fig. 2, should be removed and the surface in contact with the backstrap "K" cleaned and treated the same as for the preparation of the backstrap for reassembly per Sec. IV-C. Tighten the screws "J" only sufficiently to hold

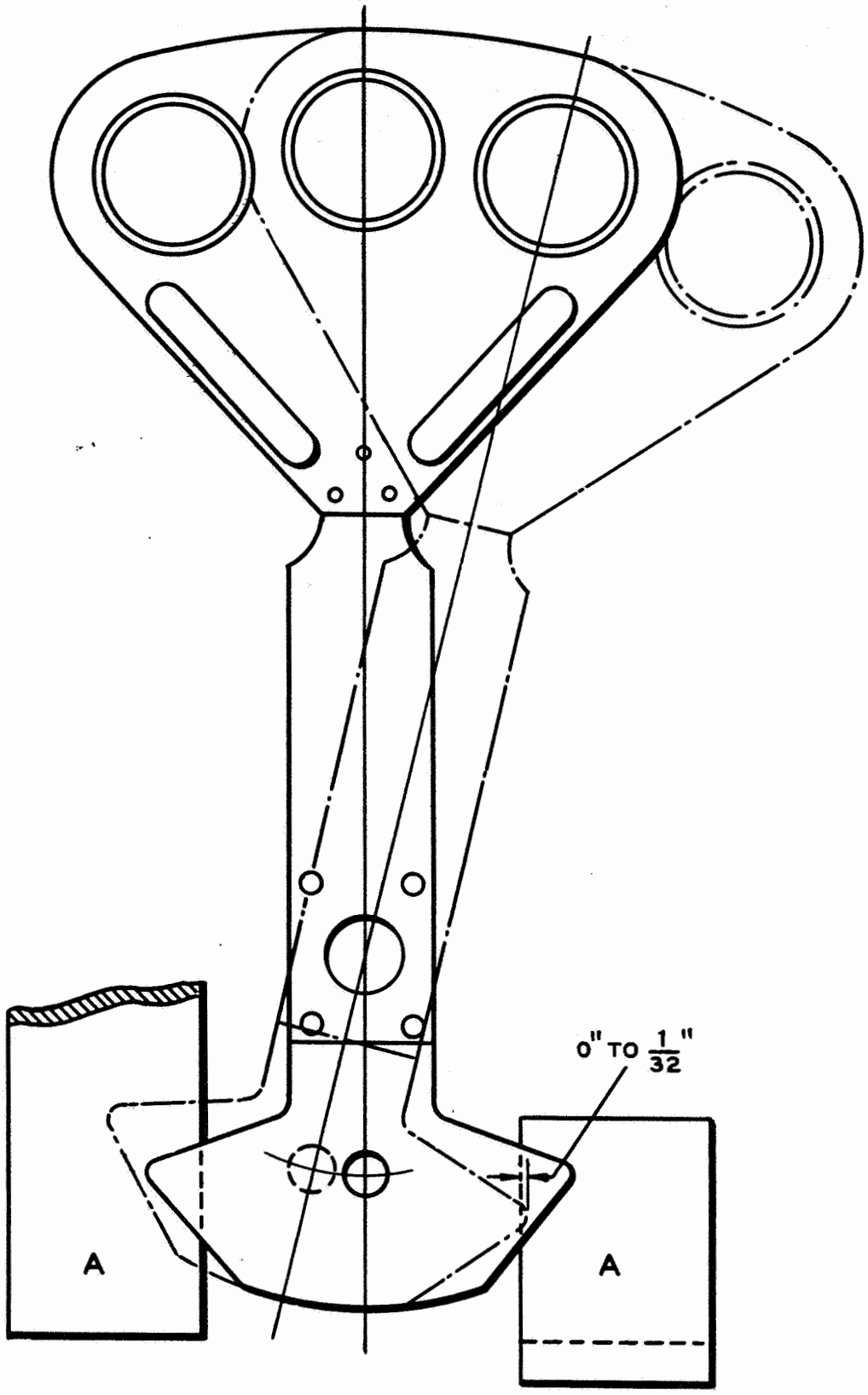

Fig. 9...Overlap

the pole pieces in place and adjust the overlap to within the limits. Set the airgaps between the pole pieces "F", Fig. 2, and the movable pole shoes "G", by shifting the pole pieces parallel to the axis of the armature. Keep the airgaps parallel, being careful not to change the overlap. The pole pieces should be tightened in place and doweled to maintain the adjustment.

The pivots for the operating arms and contact armatures shall be cleaned and free from corrosion and wear. The bearing surface of pivots that show slight evidence of roughness shall be burnished to provide a smooth surface. Bent or worn pivots should be replaced.

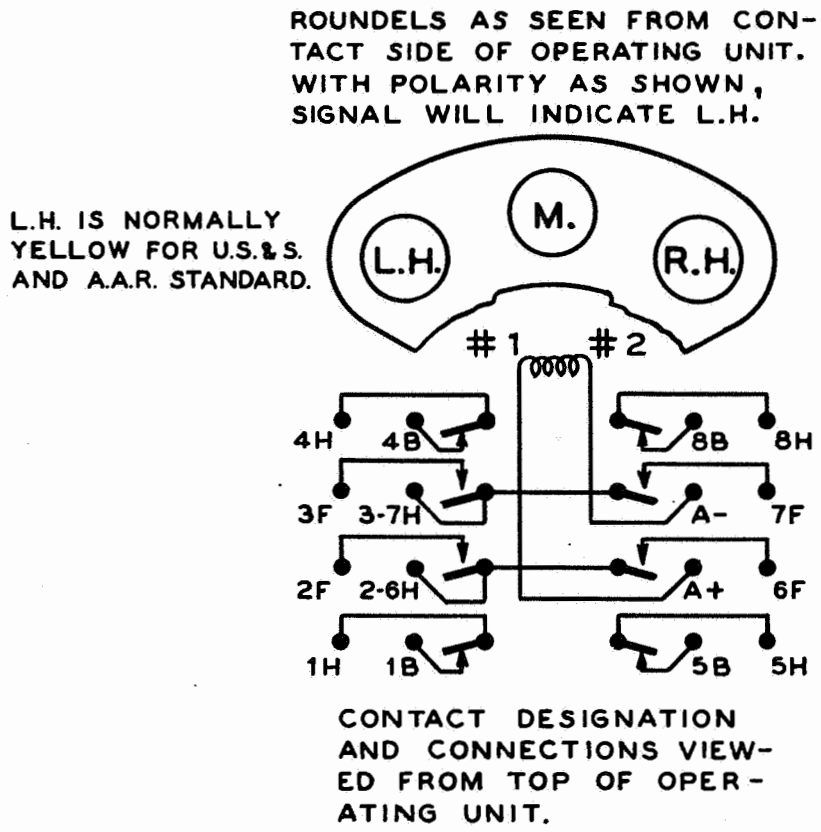

Fig. 10...Diagram of Internal Wiring

The operating arms "B", Fig.4, shall be clean and free from rough edges at "M" where contact is made with the roller "G" and the backstop "H". The pivot bushing "N" must be tight in the arm "B" and each end must extend 1/32" from the face of the arm to provide 1/32" minimum clearance and minimum contact surface with the sides of the slot. The hole as well as the ends of this bushing must be smooth and free from dirt or corrosion. The hole in the bushing is 0.0015" to 0.0025" larger than the diameter of the pivot. Set the operating arms "B", Fig.4, in the contact bracket and tighten and lock their respective pivots "D". The top surfaces of the two arms "B" will be approximately horizontal with the arms resting on rollers "G".

Silver members should be carefully cleaned before contacts are installed. Best service is obtained from a contact surface polished as highly as possible. Care should be used to avoid the coarse finish resulting from ordinary fine files, in no case using coarser than a #4 pillar file. The use of a special eraser U.S.& S.Co. Pc.101019 Dwg.12750 Sh.1 is recommended for final polishing, being careful to remove all residue. The filing and polishing operation should be done by stroking the silver in the direction of slide.

Bent, loose, or pitted contact parts must be replaced. Front contacts with burned or loose carbon tips or holders should be replaced. Adjust all four contact springs in each contact armature so the tips are equally spaced and in line and the individual springs are perpendicular to the axis of the pivots. Place the contact armature in the contact bracket "C", Fig.4, and adjust the pivots so the arm "I" is approximately centered on the front stop screw "J", with the end play adjusted to between 0.010" and 0.015". The strap connector (soldered to the flexible leads for front contacts on both sides in spaces #2 and #3) must be in place and properly installed for attachment to the inside terminal posts on the left side of the top plate.

After the contact armatures have been properly installed, the stroke of the armature shall be adjusted. A suitable gage with

an arm for locating the vertical centerline of the unit is attached to the upper backstrap. Backstop screws "H", Fig.4, are then adjusted in or out until the middle roundel is centered with the gage and the operating arms just touch their respective rollers on the armature pole shoe. Clamp this adjustment in position with the lock nut and locking strip "K".

Install a temporary set of permanent magnets and apply full operating voltage on the coil. Adjust the corresponding front stop screw "J", Fig.4, until the outside roundel is properly located in the center position, locking the adjustment with the locking strip and nut "L". Reverse the polarity on the coil and repeat this adjustment for the stroke in the reverse direction. Note the polarity required to operate the mechanism in accordance with the wiring diagram,Fig.10. Remove the set of temporary magnets from the mechanism. Install the supporting strap and stud to the center of the upper backstrap, leaving the locking nuts loose on the lower end of the stud where it passes through the contact bracket.

Make certain that the inside surfaces of the cover "K", Fig.1 a & b, are clean. The front and back windows must be clean and free from large and unsightly scratches and other defects that may interfere with the passage of light through them.

If the joint between the cover "K" and the top plate "B" has been opened, clean and reseal with a thin film of black varnish of thick consistency, removing any excess varnish squeezed out of the joint.

Remove the short temporary screws in the end holes of the upper backstrap, substituting the original longer screws "I", Fig.1, used after the mechanism is assembled to the top plate. Set the top plate (with cover attached and back window removed) on the assembled mechanism, tightening the two screws "I" and one screw "J", The two clamping nuts "M" on the lower end of the supporting stud "N" where it passes through the contact bracket "O" are then tightened in such a way that the end play of the armature previously adjusted between the limits of 0.005"

and 0.007" is not changed. If the end play is changed, readjust these nuts until the end play is within the above limits. Clearance between the spectacle and front window in the cover shall be checked to be 1/8" and adjusted, if necessary, by bending the spectacle arm to meet this requirement.

This 1/8" clearance applies to units furnished prior to 1941 at which time the roundel was relocated and an adapter with a convex window and a conical light baffle added to the front of cover "K". The clearance between the spectacle and the back surface of the conical baffle in these units shall be ¼" and must be so checked and any necessary readjustment made, as mentioned above, before the unit is sealed.

Units furnished since October, 1945 have been of a still later design in which the flat red disc roundel has been replaced with a conical red roundel. In addition cover "K" was redesigned to incorporate the conical light baffle as a part of the cover and the convex window was changed to have a conical form. The ¼" spectacle clearance was maintained and no special handling will be necessary on units furnished since October, 1945. However, should it become necessary or desirable to change the red roundel from flat to conical, special handling will be required. All necessary information for such a change is contained in Instruction Pamphlet U-5461 and Drawing S-4235 Shs. 10 and 11.

Clean and reseal the joint between the cover "K" and the window "H" with a thin film of black varnish. Attach the LH (long) and RH (short) coil leads to the top plate posts marked "A+" and "A-" respectively to provide operation per Fig. 10, making certain the clips holding the carborundum block lightning arrester are bent sufficient to clamp the block. Apply and lock the front contact heel connectors and the back contacts on the inside row of terminal posts each side. The front contacts and back contact heel connectors are then applied and locked on the outside row each side.

Center the front and back contacts on their respective contact springs with the end play of the armature adjusted between 0.010" and 0.015".

All contacts shall have at least 0.050" opening. The silver to silver impregnated carbon front contacts and the silver to silver back contacts shall be adjusted as follows. With a spacer of 0.031" under the back stop, the back contact shall be adjusted to be just open, and similarly with a spacer of 0.036" under the front stop, the front contact shall be adjusted to be just open. NOTE: - The values of 0.031" and 0.036" are minimum and cannot be reduced. However, they may be increased within the limits of calibration as described in Section V-D-4.

The carbons should be cleaned by slightly filing in a plane parallel to the springs. A #4 equalling file 0.040 inch thick is suitable for this cleaning. After carbons are filed, it is advisable to remove the loose carbon particles by pulling a strip of good clean bond paper through the contact space against the carbon. To avoid introducing particles of paper, the sides or ends of paper strip should not be passed between the contact members. Paper with shiny surface or lint should not be used.

Cleaned contact resistances after adjustment should be within the following:

Silver to Silver - 0.030 ohm
Silver to Silver
Impregnated Carbon - 0.10 ohm

Permanent magnets must be clean and free from dirt, iron filings, etc. and have the end which attracts the south seeking pole of a compass marked with a letter "N". When assembled in the unit, the marked end of the magnet is placed upward, and the clamping bolt is tightened only until the center of the clip is approximately 1/32" away from the magnet. Do not tighten so the center of the clip is against the magnet, as this may result in broken magnets.

V. CALIBRATION

After the contacts and stops have been adjusted as outlined above, the operating unit shall be checked and calibrated as follows:

A. With voltage applied as shown on the wiring diagram, Fig. 10, the armature must operate in the direction indicated.

B. Drop-Away, Normal Polarity

1. Without Contact Pressure

   a. Apply a charge voltage of twice the pick-up, with polarity as indicated on wiring diagram, Fig. 10.

   b. Keep the front contacts closed and the back contacts open by holding Arm I against stop J, Fig. 4.

   c. Reduce voltage gradually until armature is in the deenergized position. (Arm B against Stop H, Fig. 4).

   d. Voltage at which Arm B just touches Stop H is the Drop-Away value without contact pressure, and should be made to agree with value shown in table by adjusting counterweight on Arm B.

   e. Lock the counterweight in the position determined in 4, and do not change unless more counterweight is needed as outlined under "Pick-up".

2. Drop-Away with Contact Pressure

   a. After locking the counterweight to meet "drop-away without contact pressure" apply charge voltage again in the same direction at twice pick-up.

   b. With contacts free reduce voltage gradually until Arm B just touches Stop H, Fig. 4. The voltage at this point is Drop-Away with contact pressure and should not be less than value in table. Adjustment for obtaining this value should be made only with the counterweight on Arm "A" of the contact structure.

C. Direct Pick-Up and Working, Normal Polarity

1. Immediately after obtaining "drop-away" open the circuit for one second.

2. Apply voltage, in same direction, increasing gradually until Arm I just touches Stop "J", Fig. 4. This value of voltage is "Direct Pick-up and Working", and should not exceed the value in table.

3. A value of "Pick-up" in excess of that shown in the table is an indication of friction in moving parts or of weak permanent magnets. The mechanism should first be checked to see that all moving parts are free and that pivots are clean and free of foreign matter. If this does not correct the high pick-up, then exchange the permanent magnets for a set which is known to be fully charged. Be sure and recheck both "pick-up" and "drop-away" after such a correction.

D. Drop-Away, Direct Pick-up and Working, Reverse Polarity

1. With a charge of twice "pick-up" and polarity opposite to that shown on wiring diagram, Fig. 10, repeat the operations "B" and "C".
2. Values of voltage thus obtained must be within those shown in table and shall not vary more than 0.6 volts from those taken with normal polarity.
3. When the variation is more than 0.6 volts increase the counterweight on Arm "A" of the contact structure on the lower reading side and recheck the drop-away and pick-up values. If the maximum contact armature counterweight is insufficient to provide the desired adjustment the counterweight on Arm "B", Fig. 4, must be increased. (Do not decrease the counterweight adjustment made in Section V-B-1-d).
4. If the preceding readjustment has resulted in drop-away values differing by more than 0.6 volts without bringing the pick-up values within 0.6 volts of each other, add front contact pressure to the side having lower pick-up (by using a spacer of more than 0.036" under the front stop for adjustment per Section IV-B) until the desired pick-up value is obtained.

E. Reverse Pick-up

1. Apply charge voltage equal to twice pick-up and of polarity shown in diagram Fig. 10 to the armature.
2. Reduce voltage until armature comes to the central or deenergized position.
3. Open the circuit and apply voltage in the reverse direction.

4. Increase voltage gradually until the armature picks up and Arm I just touches Stop J, Fig. 4. This value of voltage is the reverse pick-up, normal polarity, and shall not exceed the value shown in the table.
5. Apply charge voltage equal to twice pick-up and of polarity opposite to that shown in diagram Fig. 10, to the armature.
6. Reduce voltage until armature comes to the deenergized position.
7. Open the circuit and apply voltage in the opposite direction.
8. Increase voltage gradually until the armature picks up and Arm I just touches Stop J. This value of voltage is the reverse pick-up for reverse polarity, and must not exceed that shown in the table. In addition it shall not vary more than 0.6 volts from the reverse pick-up taken for normal polarity.

TABLE OF OPERATING VALUES
(Values based on temperature of 70°F.)

Type of operating Unit	Armature Resist. Ohms	Drop-Away Volts (Min.)		P.U. & Working Max. Volts		Rec. operating Min. Volts
		Without Cont. Pressure	With Cont. Pressure	Direct	Reverse	
With Cont. 2-2	250	0.50	2.0	5.2	5.4	5.5
With Cont. 2-2	500	0.65	3.0	7.95	7.95	8.1

VI. FINAL INSPECTION

Before sealing operating unit make certain that:

Counterweights are properly secured and locked.

Screws holding contact springs are tight and properly locked.

Screws holding contact spring blocks to contact armatures are tight and properly locked.

Screws holding bearing caps are tight.

Trunnion Screws in operating arms are tight and properly locked.

The nuts on pivot screws in contact armature are tight and properly locked.

Operating arms operate freely, have proper clearance from adjacent parts and properly engage the stop and roller with sideways motion taken up.

Top of spectacle cannot be moved from central position without lifting operating arm.

Operating and contact armatures are free and have proper end play.

Operating unit is free from all dirt and foreign materials.

Wiring and polarity checks with wiring diagram.

Glass case, colored roundels and glass covers are cleaned and polished.

Nameplate has piece number, serial number, and resistance stamped on it.

An Inspection Label such as our Form 1039 completely filled out should be applied to the glass cover on the front of the unit.

VII. SEALING

The glass cover should be fastened securely in place, located to bear evenly on the gasket, clear all operating parts and properly clamp the edge of the inspection label against the gasket. Check to see that the inspection label has not shifted.

After sealing, a visual inspection shall be made to see that the parts of the operating unit have not been damaged in applying the glass cover, and that the glass cover has proper clearance from all parts of the operating unit.

WRITTEN BY: M. R. Douglass APPROVED BY: H B Wells

CHECKED BY: W.K. Lockhart DATE: 11-19-53